Aux Battery V2

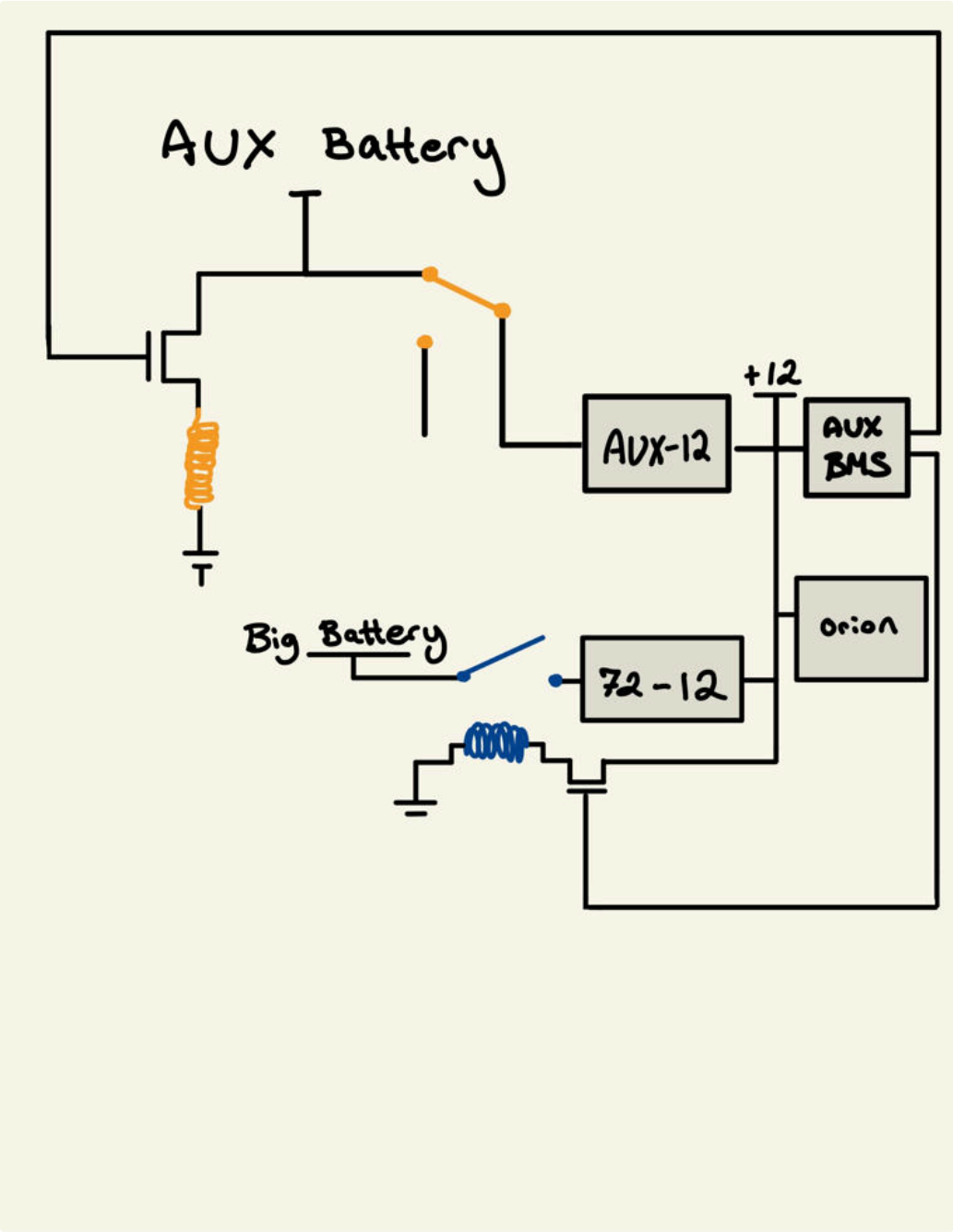

diagram of how the batteries work

There are two different batteries in the car. One is small, the other one is big. The small one is called the *Aux Battery.* The big one is called the *Big Battery* (shocking, I know). The *AuxBMS* and *Orion,* our battery management systems, are supposed to be charged by the big battery while the car is running.

When the car is turning on, the *AuxBMS* and *Orion* should be up and running **before** the big battery is turned on. This is because the *AuxBMS* and *Orion* check the state of the big battery and make sure it is safe to turn on. We have to check this beforehand because we don't want to turn on a broken battery! 💥

So, to turn on the *AuxBMS* and *Orion* first, we use a small battery called the *Aux Battery*. This battery is only 24 volts. Let's look at this on the diagram (what I highlighted in green).

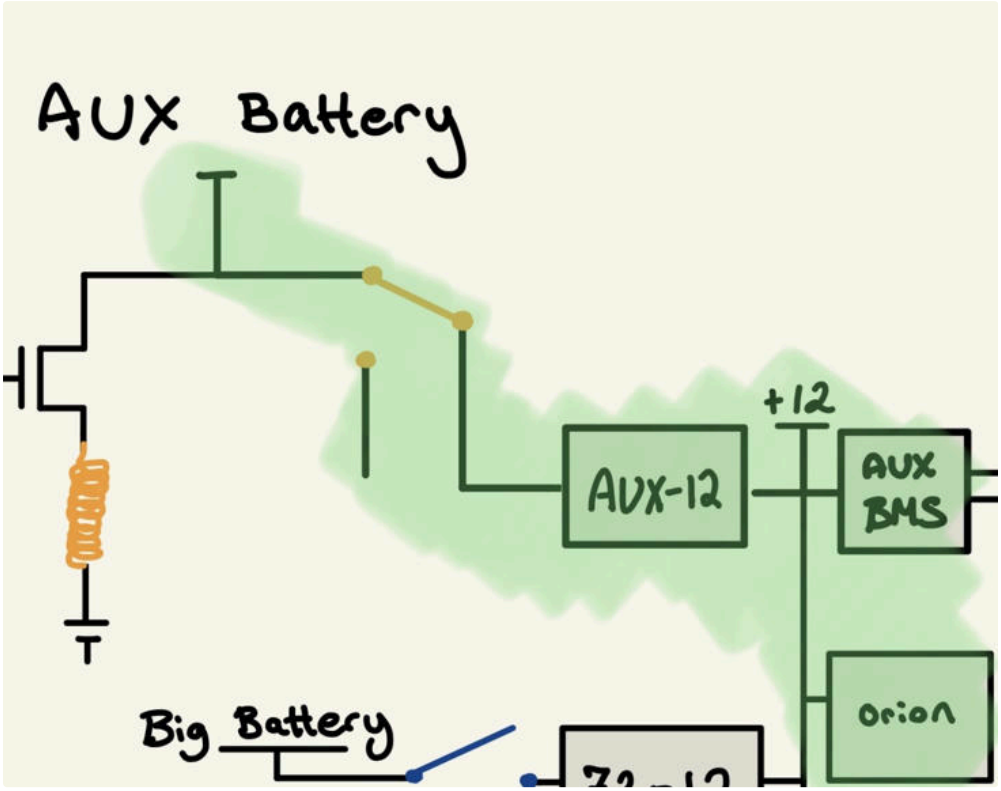

Here, we can see that first the voltage from the Aux Battery goes to this orange line. What this represents is a switch. This switch is engaged. The engaged state is its resting state. The voltage then continues down the line to a box called Aux-12. This box is called a converter and makes the voltage 12 volts instead of 24. That's also what the +12 represents. As we can see below, it's saying everything in these wires are 12 volts. Electrical terminology 🤓 .

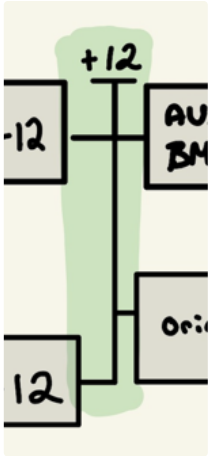

Now, that current is going to go to the AuxBMS and Orion and turning them on. Great! Now they're up and running, we can check if the big battery is in good state. If it is in good state, the AuxBMS will send a current through the wire highlighted below. This wire will basically connect the current and make the blue spiral charged (look at the notes for the physics behind it!). What the blue spiral does is once a current is going through it, it becomes a magnet. Because it becomes a magnet, it attracts the blue switch above it. Then, the blue switch closes and completes the circuit allowing current from the big battery to flow. That current first goes to the convertor because the voltage is 72 volts. It converts it to the needed 12 volts and now the AuxBMS and Orion are charged by the big battery. The reason why the big battery has 72 volts when only 12 volts are needed for the AuxBMS and Orion is because the motors require 72 volts and the big battery also powers that. The batteries should be higher than what is needed due to how it is easier to step down voltage than it is to step up.

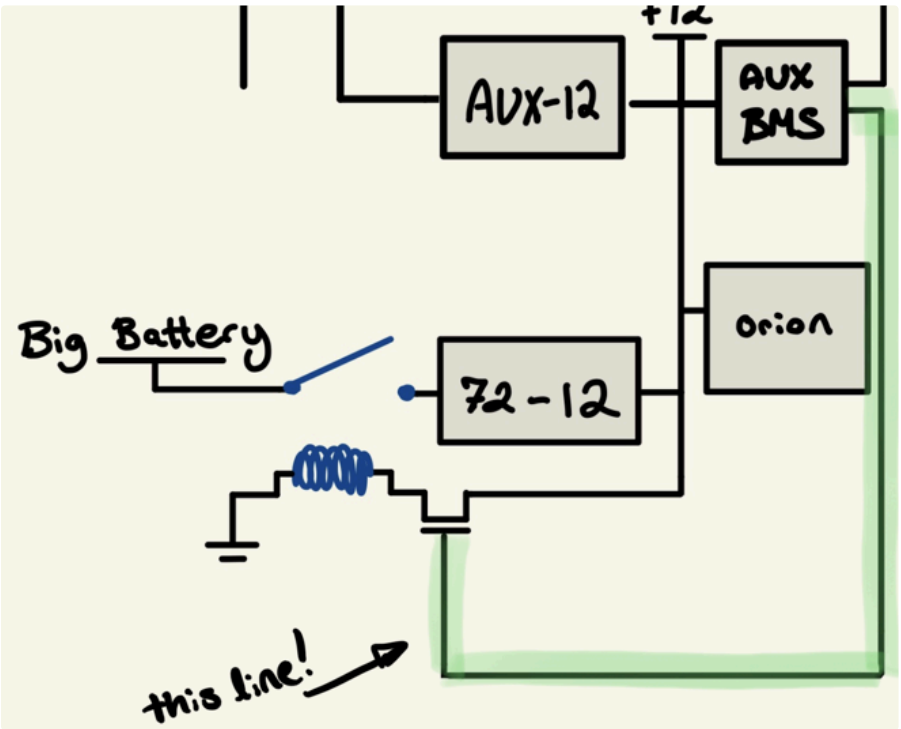

However, the Aux battery is still on! We don't want this because the battery from the AuxBMS will be drained. That happened with the old car Elysia. So, we want to turn off the Aux Battery. If we look at the orange highlight below, we can see that at the same time the current is sent to the wire that turns on the *Big Battery*, another current is sent to another wire connector. This will turn on the orange spiral, thus creating another magnet and attract the orange switch. This switch will then disconnect, thus breaking the current coming from the *AUX Battery.*

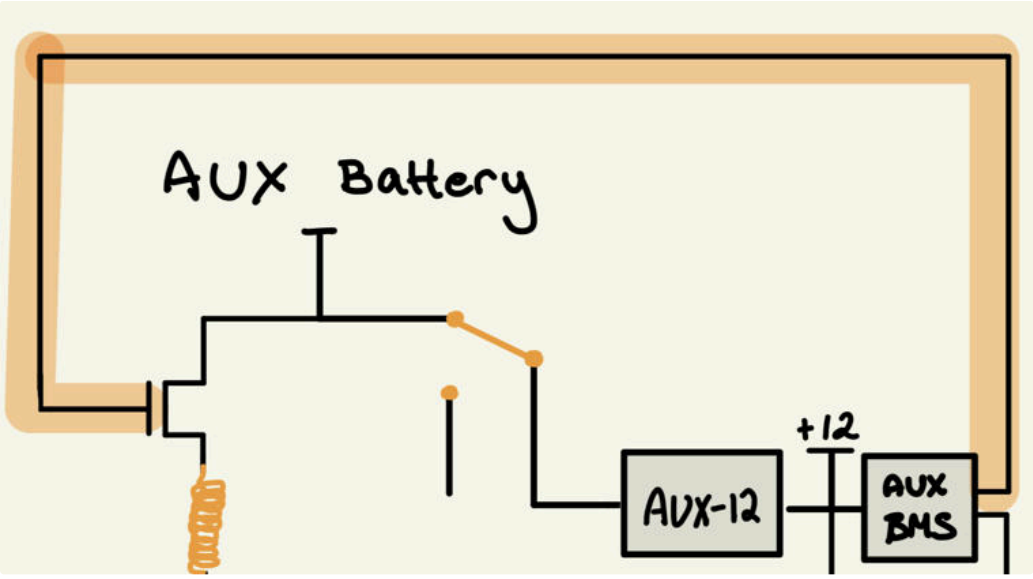

So, that's how the *Aux Battery* and *Big Battery* work. Feel free to read below to understand how MOSFET, the unmoving switch, works.

Notes:

You can have a mechanical switch (such as the orange line from the Aux Battery). It connects the current but it also moves so it can get old and break, which will not be good. So, there is something called a non-mechanical switch. In a diagram, it would look like this:

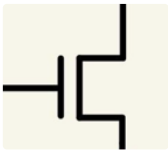

The way it works, is that a current is coming from the highlighted area:

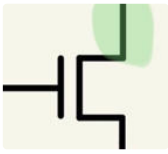

However, the current can't pass through because the bump stops it. This is what the bump is doing:

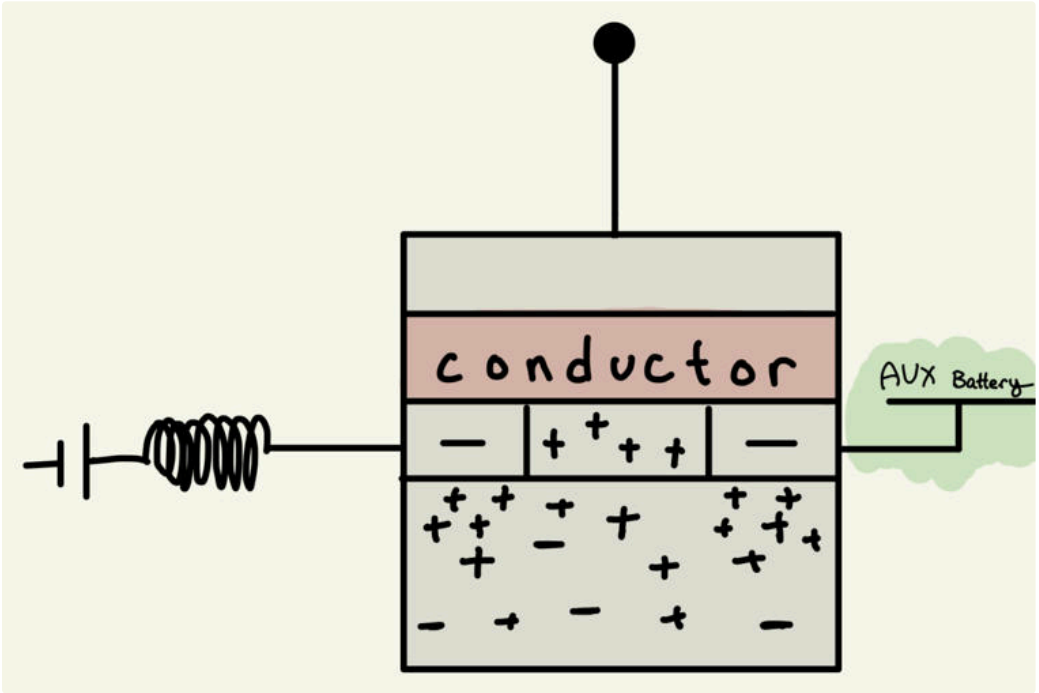

As we can see, there are two negative charges with a gap in-between them. Below them, there is a box full of mainly positive charges with some negative charges. The positive charges are attracted to the negative charges in the top boxes. And since the current is made up of negative charges, it can't pass through the line due to the positive charges blocking the way. This is how a current is stopped from flowing without physically disconnecting a wire. The negative and positive charges in the bottom box are not attracted to each other because it's a property of the material the bottom box is made up of.

To make the current flow, a charge is sent from the black dot. This black dot represents another source of current. In the example of the AuxBMS turning off the Aux Battery, the black dot would be the current the AuxBMS is sending. It would be this part:

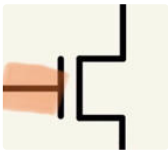

When a current is sent from here, it sends a bunch of positive charges to the box above the conductor:

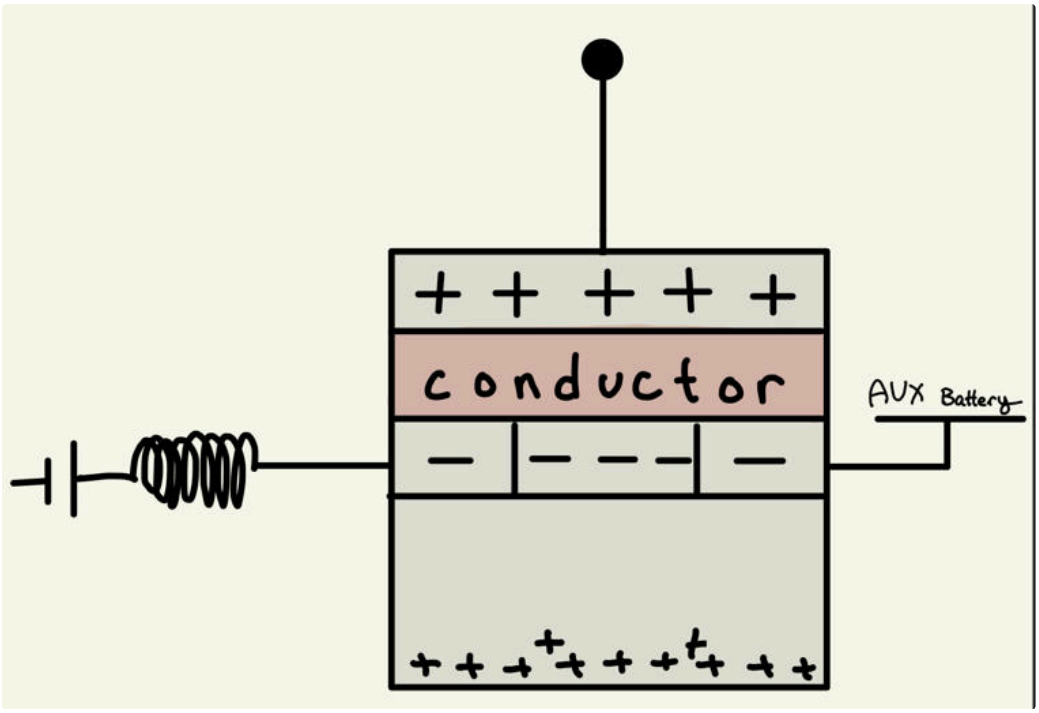

These positive charges, repel the other positive charges and attract the few negative charges in the bottom box. They don’t interfere with the negative charge line because they can't pass through the conductor. This causes a line of negative charges to form, thus completing the circuit and allowing the charge from the Aux Battery to flow.

That’s a simplified version of how MOSFET, the unmoving, switch, works. Hope you enjoyed 🎉

Thank you Marcelo Li Gonzales for explaining everything to me!